# QUICKSHIP 8 FT - 26½º PYRAMID

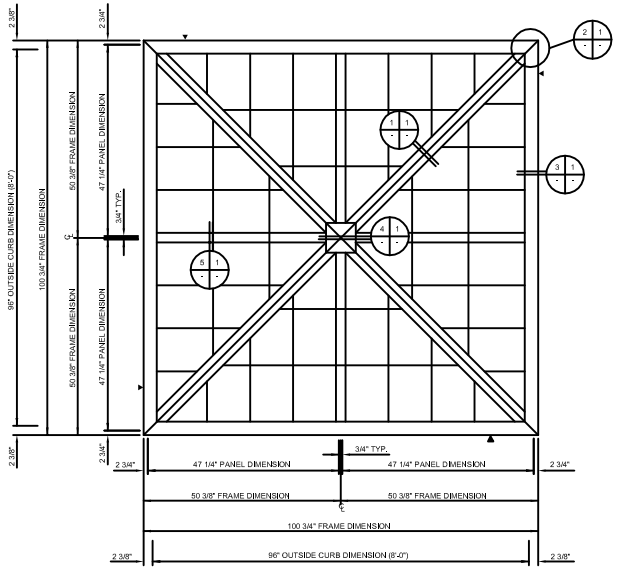


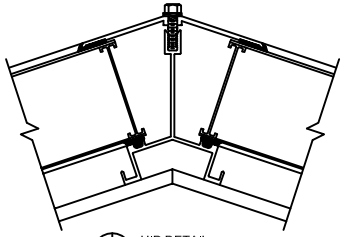

HIP DETAIL
SCALE: NTS

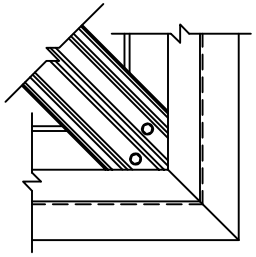

HIP CONNECTION
SCALE: NTS

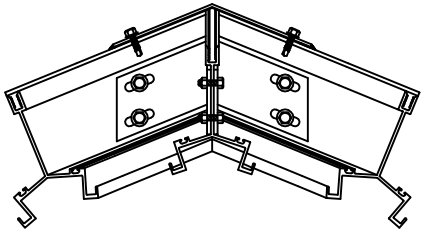

COMPRESSION CONNECTION
SCALE: NTS

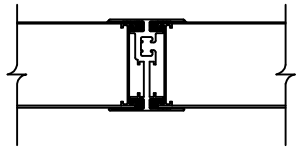

MATING BAR DETAIL
SCALE: NTS

GUARDIAN 275
QUICKSHIP PYRAMID
TRANSLUCENT PANEL
SKYLIGHT SYSTEM

▶ INDICATES 1/4" EXPANSION JOINT (TYP.)

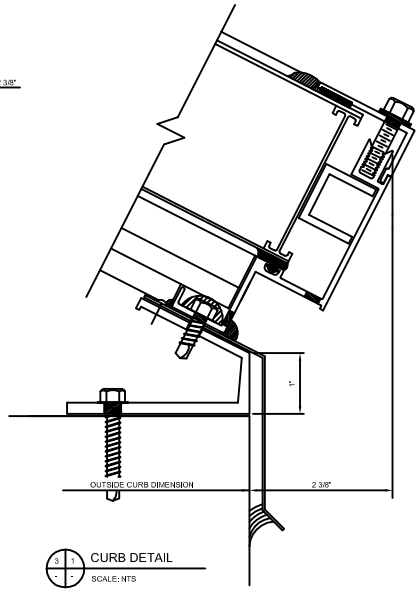


CURB DETAIL
SCALE: NTS

GUARDIAN 275 ®
TRANSLUCENT PANEL
SKYLIGHT SYSTEM

***UNIT IS PICTURED WITH STANDARD GRID CORE.***

***THERMALLY BROKEN OPTION IS NOT SHOWN.***

QS8-612PKD


**MAJOR INDUSTRIES, INC.**

*7120 STEWART AVENUE*
*WAUSAU, WI 54401*
*PO BOX 306*
*WAUSAU, WI 54402-0306*

*TELEPHONE:*
*(715) 842-4616*
*ENGINEERING FAX:*
*(715) 843-5139*


***QUICKSHIP***
***8'-0" - 26½º PYRAMID***