QUICKSHIP 9 FT - 26½º PYRAMID

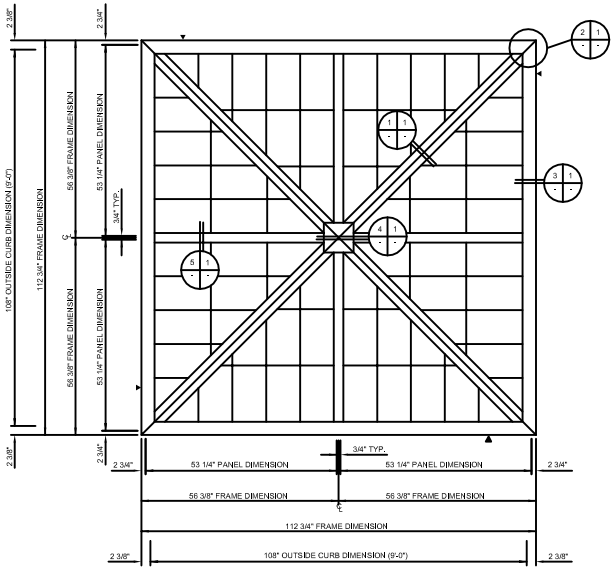

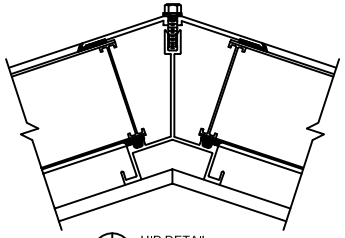

HIP DETAIL
SCALE: NTS

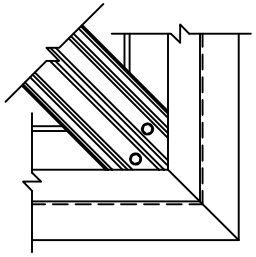

HIP CONNECTION
SCALE: NTS

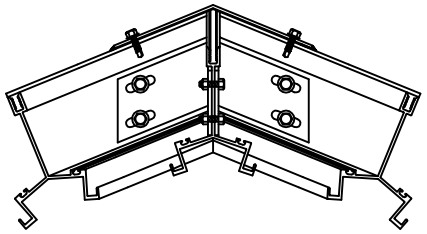

COMPRESSION CONNECTION
SCALE: NTS

GUARDIAN 275
QUICKSHIP PYRAMID
TRANSLUCENT PANEL
SKYLIGHT SYSTEM

▶ INDICATES 1/4" EXPANSION JOINT (TYP.)

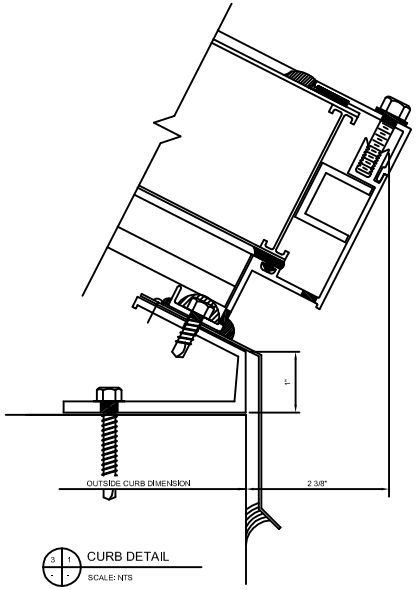

CURB DETAIL
SCALE: NTS

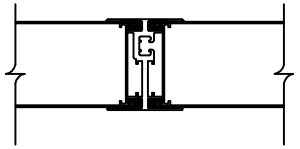

MATING BAR DETAIL
SCALE: NTS

GUARDIAN 275 ®
TRANSLUCENT PANEL
SKYLIGHT SYSTEM

UNIT IS PICTURED WITH STANDARD GRID CORE.

THERMALLY BROKEN OPTION IS NOT SHOWN.

QS9-612PKD

MAJOR INDUSTRIES, INC.

7120 STEWART AVENUE
WAUSAU, WI 54401
PO BOX 306
WAUSAU, WI 54402-0306

TELEPHONE:
(715) 842-4616
ENGINEERING FAX:
(715) 843-5139

QUICKSHIP
9'-0" - 26½º PYRAMID